Ellis Swivel Armchair

Please note the image is not representative of the shape and is for illustrating dimensions only. Dimensions are accurate to within 2cm.

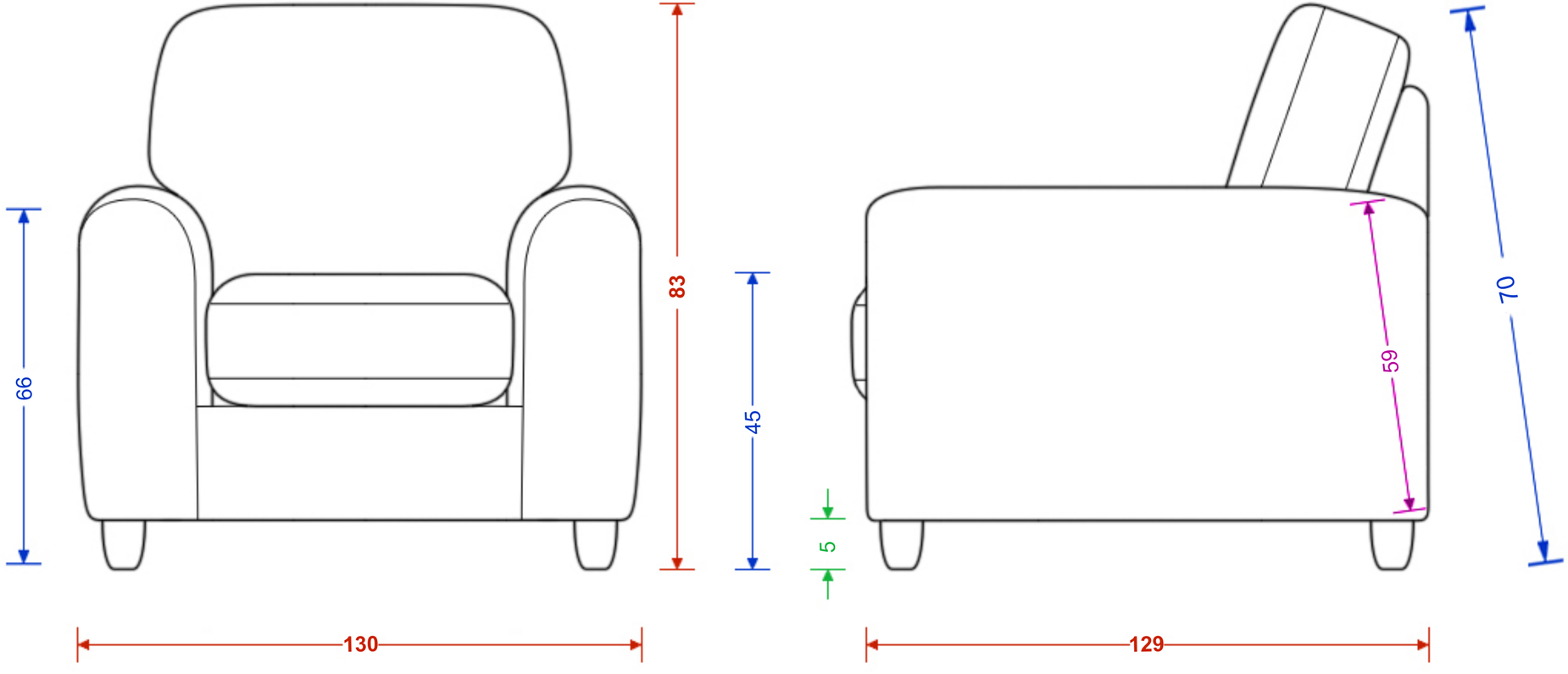

H x W x D
Seat H x W x D
Foot Height
C Dimension